MLX LED UGR Back Downlight

D10075S / 12W / 24V / 110° / back / 1800-4500K / IP54 / weiß



Product Number MLX100443.1
Weight 0.384kg

Product Description

Blendfreier Aufbaustrahler

Properties

type	zurückgesetzt, UGR
IP	IP54
warranty	5 years
Service life in hours	50,000
frequency range	100–20,000 Hz
Colour rendering index (CRI)	typ. 96
beam angle	110°
Material	Aluminium + PMMA-Diffusor
Brightness in lumens	600lm (kombi), 230lm (ww), 380lm (cw)
height	75mm
Colour	white
diameter	100 cm
colour temperature	1800–4500K
power	12W (6W + 6W)
input voltage	24V DC
Dimmable	Yes
Form	around
Dimming Typ	PWM

UGR	< 90

More Images

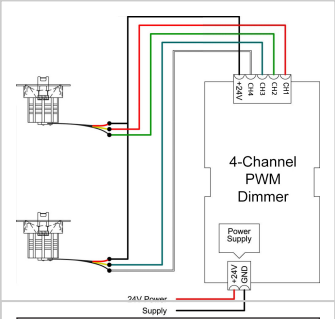
4-Channel
PWM
Dimmer
Power
Supply
24V Power
Supply



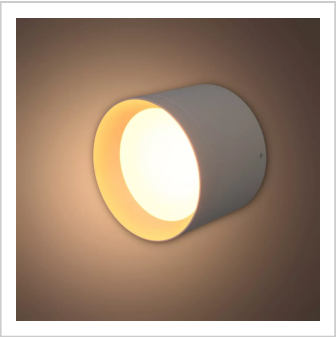

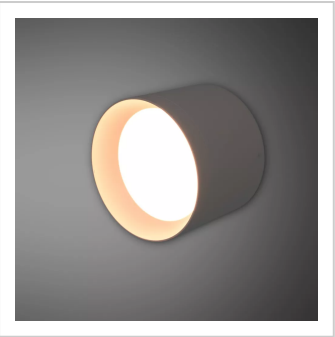

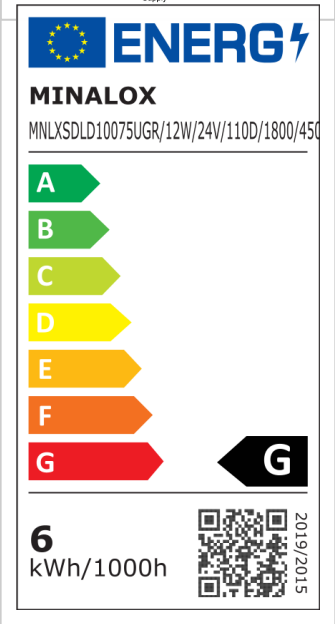
ENERG
MINALOX
MNLXSDLD10075UGR/12W/24V/110D/1800/450
A
B
C
D
E
F
G
G
6
kWh/1000h
2019/2015